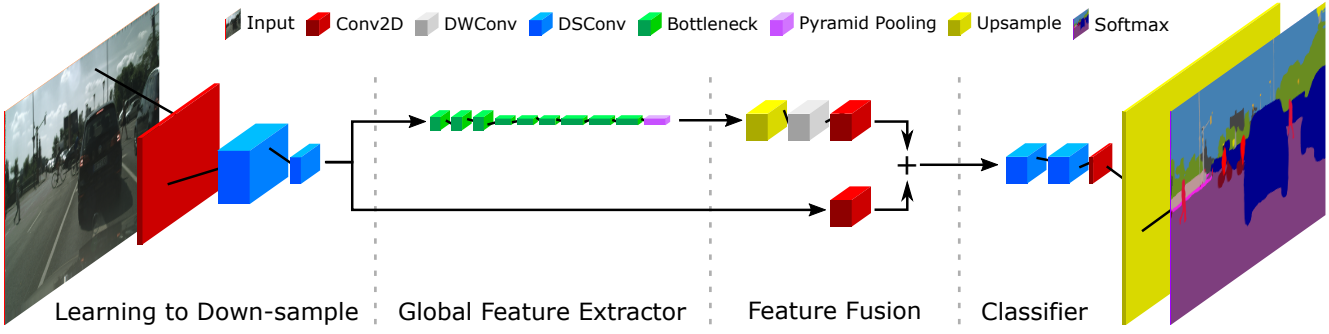

Figure 1. Fast-SCNN shares the computations between two branches (encoder) to build a above real-time semantic segmentation network.